VideoMic Pro

Compact Shotgun Microphone

AUSTRALIA
107 Carnarvon st, Silverwater NSW 2128 Australia
Ph: +61 2 9648 5855 Fx: +61 2 9648 2455

USA
PO Box 91028, Long Beach CA 90809-1028
Ph: +1 562 364 7400 Fax: +1 888 412 4664

Specifications

Acoustic Principle	Line Gradient
Directional Pattern	Super-Cardioid
Frequency Range	40Hz ~ 20,000Hz (selectable HPF@80Hz)
Sensitivity	-38dB (12.6mV@94dB SPL) ±2dB re 1V/Pa @ 1kHz
Output Impedence	200Ω
Equivalent Noise	20dBA SPL (A - weighted per IEC651)
Maximum Output	+6.9dBu (@ 1% THD into 1kΩ)
Dynamic Range	114dB (per IEC651)
Maximum SPL	134dB (@ 1kHz, 1% THD into 1kΩ load)
Signal/Noise	74dB SPL (A - weighted per IEC651)
Power Req.	9V alkaline battery (Current 7.8mA)
Dimensions	150mm x 95mm x 43mm (6" x 3.74" x 1.69")
Output Connection	3.5mm stereo mini-jack (dual mono)
Net Weight	85g (3oz)

Features

- Broadcast recording quality condenser microphone
- Compact form factor (150mm/6" length)
- Ultra lightweight (85g/3oz)
- 9V battery powered - over 70 hours use (alkaline)
- Integrated shock mounting
- Integrated foam windscreen
- 3.5mm stereo mini-jack output (dual mono)
- Two step High Pass Filter (flat, 80Hz)
- Three position level control (-10dB, 0, +20dB)
- Camera shoe mount with 3/8" thread for easy boompole mounting
- 10 year warranty with online registration at www.rodemic.com/warranty

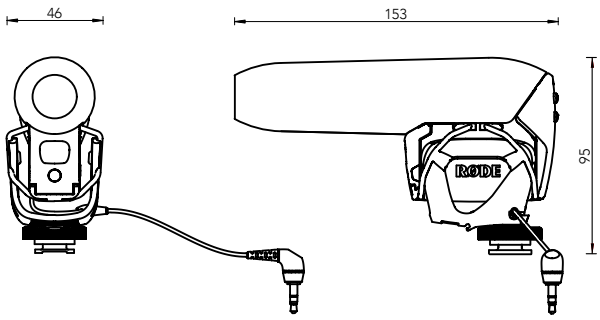

Polar pattern

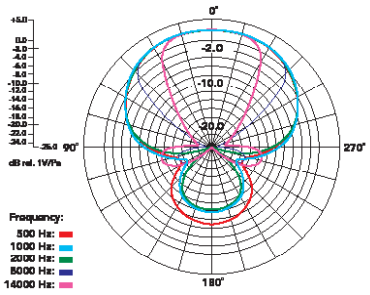

Frequency response

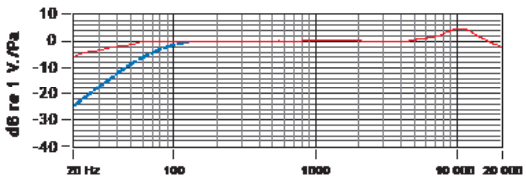

RØDE MICROPHONES